OPERATION INSTRUCTION

External Thread Taper Measuring Instruments

Caution: Prevent liquid from getting into indicator to damage electronics.

Code	Range (L)	Digital indicator stroke	Resolution	Accuracy
2240-10	0-10"/0-254mm	0.5"/12.7mm	0.0005"/0.01mm	0.03mm

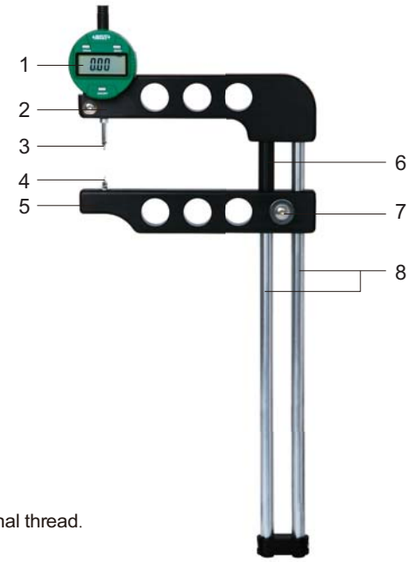

1-Digital indicator
2-Upper arm
3-Movable point
4-Fixed point
5-Lower arm
6-Limit protection sleeve
7-Locking screws
8-Sliding rods

1. Measure the taper of external thread.

2. Measurement:
   ---Mark the measured thread and determine the measuring position.
   ---Select the appropriate thread points according to the type of thread to be tested and the number of threads per inch (refer to the table of thread ball points)
   ---Loosen the locking screws, adjust the upper/lower arm to the diameter position of the external thread, and then lock and fix it, place the fixed proint in the groove of the first (or last) tooth of the complete thread, place the movable point in the alveolar opposite to the same tooth diameter, and dial indicator needs to reserve a certain amount of preload.
   ---Fixed point remains fixed, and the movable point swings in a small arc in the alveolar, after finding the maximum reading position, set the digital indicator to zero, complete the measurement steps.
   ---Repeat the above measurement steps along the marked position on the measured thread and record the reading of the dial indicator.
   ---The difference between the two measuring positions of the dial indicator is the taper value of the measured thread in this interval.
   ---Compare the calculated taper value with the measured thread standard taper value to determine whether the thread taper is qualified.
   Note: The product comes with a extension rod with a length of 30mm. If the measured thread size is below 30mm, this extension rod can be installed (in addition, there is an adjustment nut and nut adjustment wrench for adjusting the misalignment of the measuring head)

principle of measurement

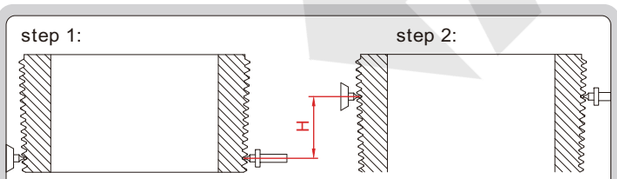

taper calculation formula: taper =A/H
A is the reading difference of indicator for two measurements
H is the distance between two measuring positions

For example, the measured thread is 1:16 round thread, with 8 teeth per inch, two measuring marks are made on the measured thread, and the screw teeth at the two marked points are 4 teeth apart, the dial indicator difference between the two measuring positions is 0.032in (A), the distance between the two measuring points is 4/8in (H), the taper is 0.032/0.5=0.064, it can be compared with the standard taper (0.0625) of 1:16 round thread tested.

3. Install and remove battery(CR2032), the negative side of battery should face out(fig.1).

fig.1

4. Buttons:
   'in/mm' ---short press: inch and mm conversion; long press: change measuring direction.
   'ABS' --- short press: absolute and relative measuring mode conversion; long press : set initial reading, short press "in/mm" to change the digit from 0 to 9, short press "ZERO" button to position the digit, long press "ABS" again to exit.
   'ZERO' --- short press: set zero; long press: power off (It's fake shutdown).

   Fake shutdown function:
   Long press the ZERO button to shut down or leave the screen without any operation for about 2 hours. At this time, it is in a fake shutdown state. In this state, it has a data memory function, and the original data is still retained when it is turned on.

   High and low frequency switching settings:
   After shutting down, press and hold the in/mm key, and shortly press the ZERO key to turn on, after displaying "----", release the in/mm key to enter the high and low frequency switching mode setting, short press the in/mm key to adjust the switching mode, display "Fr-on" means that the automatic frequency switching function is turned on. After 3 seconds without button operation and push rod operation, it will automatically switch to high frequency. Display "Fr-oF", which means that the automatic frequency switching function is turned off, and the sensor keeps the high frequency state unchanged. Short press the ZERO button to confirm and save the high and low frequency switching mode settings, and exit to the working state.

   When the automatic frequency hopping is enabled, the meter is powered on again or short press the ZERO button to turn it on, and LL will be displayed for one second, indicating that the automatic frequency hopping is currently enabled.
   When the meter is not operated for 3 seconds in this mode, the meter will automatically switch to low frequency, so the power consumption is lower, and it is more power-saving, suitable for use in the routine measurement state.
   When the automatic frequency hopping is turned off, the meter is powered on again or short press the ZERO button to turn it on, and HH will be displayed for one second, indicating that the meter is currently maintaining high frequency without frequency hopping.
   In this mode, the gauge will continue to maintain high frequency, high power consumption, and reduced battery life. It is suitable for occasions where high-speed movement of the measuring rod is required.

   Shutdown time setting (It's real shutdown):
   After shutting down, press and hold the ABS button, short press the ZERO button to turn on, after displaying "----", release the ABS button to enter the shutdown time mode setting, the default display is "6.0", which means it will automatically shut down after 6 hours of standing, short press ABS The key can switch the value, and it can switch between 0 and 99 hours every 1 hour. When the switch display is "0.0", it means that the gauge will not automatically shut down.

5. Matters needing attention:
   ---Pay attention to product protection after measurement. If it is not used for a long time, it should be stored.
   ---Oil shall be applied for protection during long-term storage to avoid rusting of products.

ball points

Code	Thread type	Threads per inch	Ball dia. (Ød)
6252-B8	round thread, line pipe	8	1.829mm
6252-B10	round thread, line pipe	10	1.448mm
6252-B115	line pipe	11.5	1.27mm
6252-B14	line pipe	14	1.041mm
6252-B18	line pipe	18	0.813mm
6252-B27	line pipe	27	0.533mm
6252-B5	buttress thread	5	2.286mm
6252-B52	extreme line thread	5,6	1.524mm

MN-2240-C/E
V1

Copyright © INSIZE CO., LTD. All Rights Reserved